D136-50 316 Stainless Steel Square Tile Insert With Puddle Flange

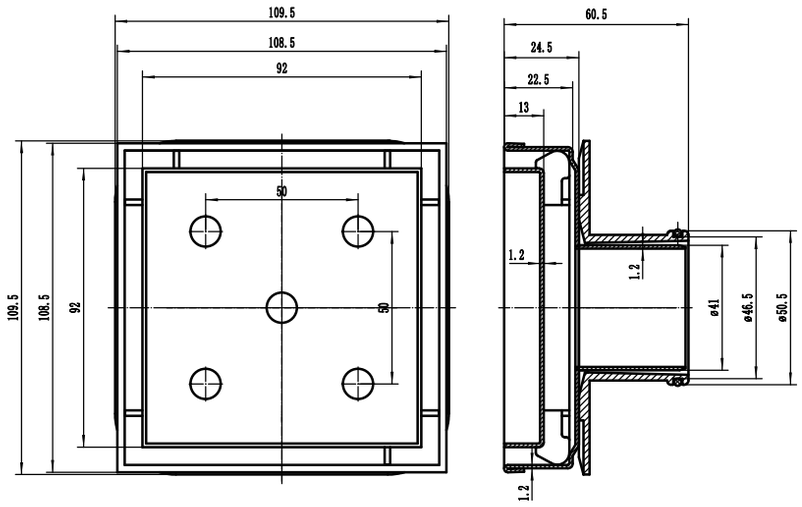

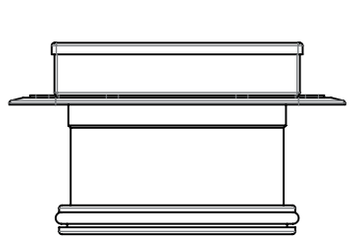

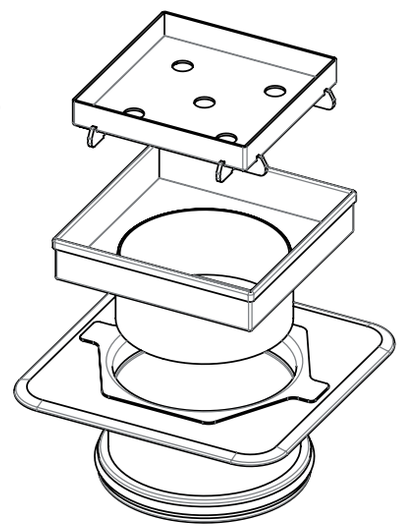

Application

Maximum Live Loading 1kN
Drainage Use Only

Material Chart

Description	Material
Tile Insert	316 Marine Grade Stainless Steel
Puddle Flange	A.B.S

Features

Watermark Approved – WM 23147
Tested and Certified to WMTS 040

WaterMark

Aupurit Pty Ltd
info@aupurit.com.au
All Rights Reserved 2023

AUPURIT