Toilet Roll Holder, Double, Controlled Delivery & Key Lock – Surface Mounted

Model No. 10-0264-12

www.asijdmacdonald.com.au freecall 1800 023 441 Date: June 2018

SPECIFICATION

Toilet Roll Holder Double Controlled Delivery & Key Lock Surface Mounted shall hold and dispense all standard core roll tissue, up to 152 mm in diameter and be fabricated of cast aluminum with a satin matte silver-gray finish. The "no waste" rocking action spindles shall be fabricated of impact resistant, ABS thermoplastic and be tamper resistant with a concealed release mechanism and locking screw that shall be removable only with a hex key. Spindles shall rotate 1/2 revolution for each operation and return to original position. Roll core shall not be removable until tissue is exhausted.

INSTALLATION

Unit is surface mounted on wall or partition using No 10 self tapping screws (supplied by others). For mounting height standards refer to current Building Code of Australia for able bodied and/or disabled use.

OPERATION

Spindles revolve ½ revolution for each operation and then return to original position and operate independently. Roll core prevents access to release pin and cannot be removed from spindle until exhausted and screw is loosened with key. Unit is replenished by releasing a concealed pin which in turn releases a spring lock mechanism on spindle.

WARRANTY

One year.

OPTION

10-0264-1 with controlled delivery
10-0264-1A with uncontrolled delivery
10-0264-1A2 with uncontrolled delivery & key lock

Toilet Roll Holder, Double, Controlled Delivery & Key Lock shall be Model No. 10-0264-12 as supplied by ASI JD MacDonald.

All ASI JD MacDonald disabled compliant products when installed must be in accordance with AS1428 to ensure the specified product is complying with all washroom specification requirements.

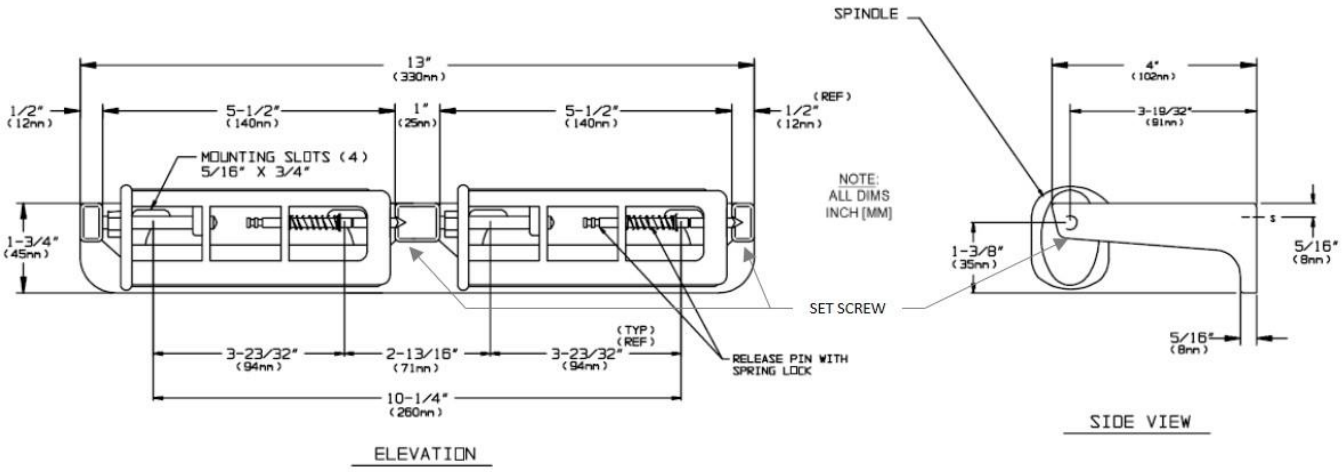

ASI JD MacDonald reserves the right to, and does from time to time, make changes and improvements in design and dimensions. The photographs and line drawings of the products in this flyer are representational only. All dimensions are in millimetres unless otherwise stated.